Quansheng UV-K5 - Hardware Hacking

Si4732 Board Version 1 Installation Tips

- Use an appropriate soldering iron
- Fix the manufacturing defects first & test
- Use low-melt solder for removing the RX chip
- Flux is your friend
- Use some removed parts leg or wire strand for the jumper wires
  - Solder to the daughterboard first then the resistor / capacitor
- Save the parts you removed
- Buy a radio just for modding

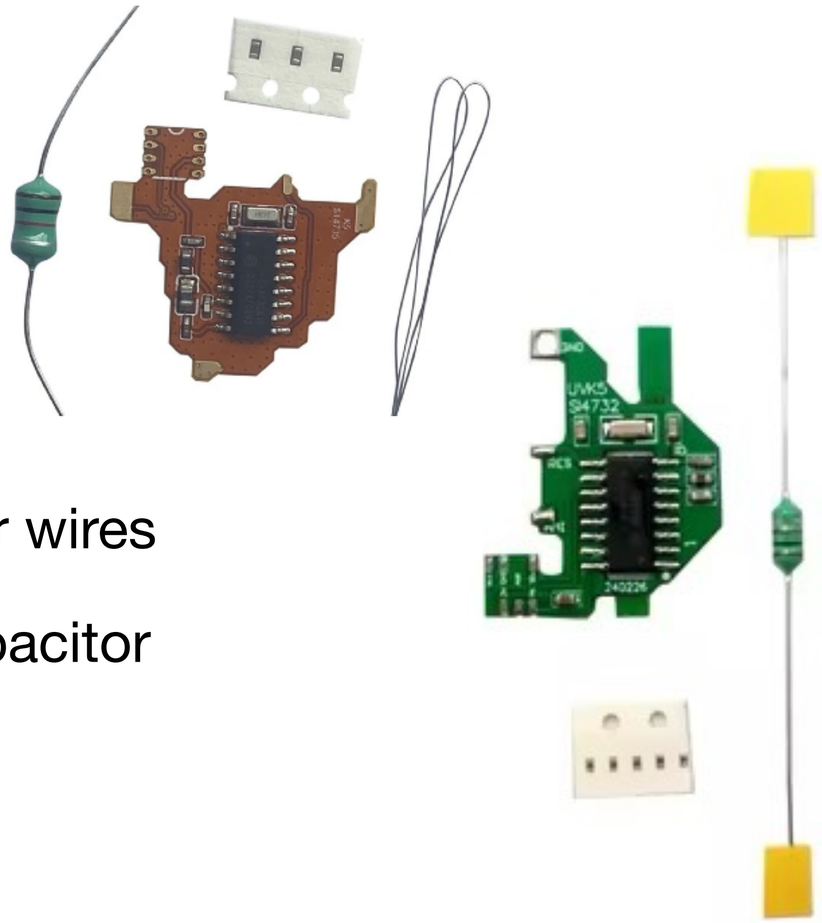

Quansheng UV-K5 - Hardware Hacking

Si4732 Board Version 2
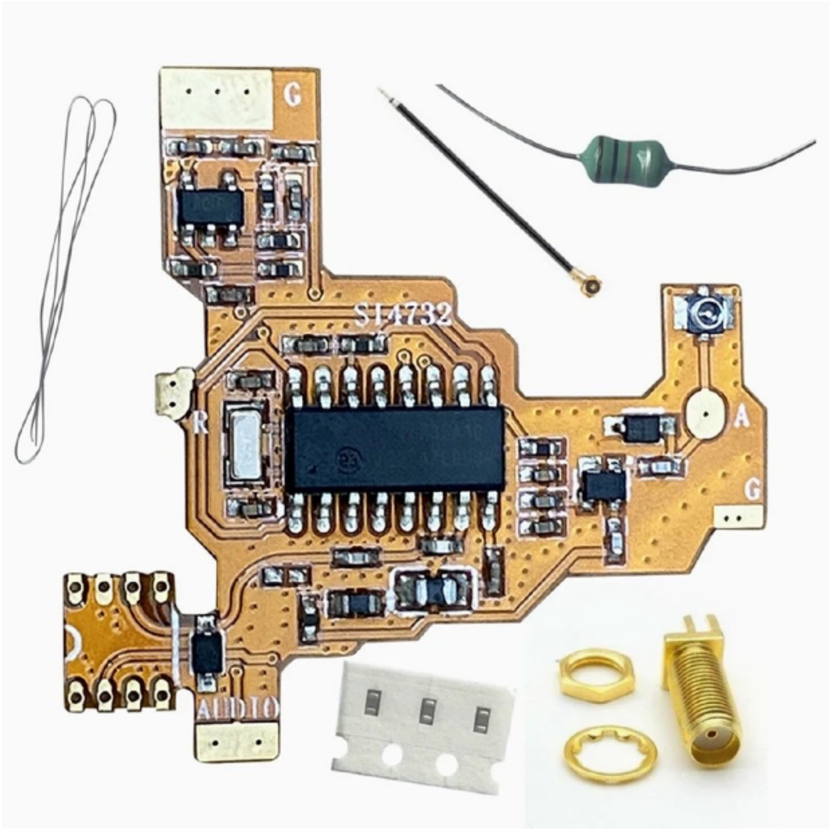
- Version 2 - R (Telegram DEV)
  - Replaces stock RF amplifier with Si4732
  - Improves AM reception
  - SSB demodulation & audio amplification
  - Additional antenna input with ESD
  - Redesigned FM & HF bandpass filters (RX only)
  - Available on AliExpress & Amazon (Shipped from China)
  - **Requires SMD component removal & soldering**